A.A.Bedelbayev, A.S.Kurmanaliyeva

Kazakh National University them. al-Farabi, Almaty, Kazakhstan

ACTIVE TRAINING OF STUDENTS TO INFORMATIONAL TECHNOLOGIES ON THE EXAMPLE OF COMPUTER K-NA PUMP SIMULATION IN THE KIDNEY NEPHRONS

Abstracts. This report examines the K-Na model of the human kidney nephron pump, which shows its function and regulating blood pressure and salt composition of human blood. The mechanism of operation in the K-Na pump, biochemical processes occurring in the body, leading to the action of the K-Na pump, and consider the algorithms for active learning in computer simulation technologies. This provides an opportunity for medical students to more fully examine and study the basic processes of the human kidney.
Keywords: K-Na pump, information technology in medicine, computer modeling, biochemical processes, active learning.

Introduction. The use of computer modeling in the active learning of students helps not only to study the area under study, but also to present the mechanism of operation of the studied object, its interaction and the basic biochemical reactions occurring at a certain point in time. The proposed report is a continuation of research into the processes occurring inside the kidney [1-4].

Methods and algorithms. The main objective of the study is to design a technology for visualizing active forms of learning about the physical, chemical and chemical-biological processes of the human kidney, as well as how to work the K-Na pump inside the kidney nephron. To design an active learning technology, you need**:**

1) To construct a structural and logical scheme for studying the mechanism of operation of the K-Na nephron pump of a human kidney;

2) To develop a library of questions and answers to them for each node in the structure of the logical scheme;

3) To develop a transition graph from one node to another node in accordance with the constructed structural-logical training scheme;

4) To develop an algorithm for estimating the transition from one node of the graph to another node and variants of this transition, depending on the scores;

5) To develop criteria for cutting off individual branches of the graph to eliminate erroneous cycles of the graph;

6) To develop an algorithm for branch cutting in dependence of the success or failure of the study material provided by the mechanisms of K-Na functioning of the kidney nephron pump.

The system of active training on the K-Na work of the kidney nephron pump allows the student to step by step, answering the questions asked, depending on the estimates received, to move on the material provided for the functioning of the K-Na pump. At the same time, during the movement of the trainee through the built-in motion mechanism, the graph is cut off in the training graph, leading to a cycling of the transition process. This is done by viewing several nodes deep into the graph during the possible movement of the learner. Assessment of the occurrence of possible cycles in the course of training is carried out through the use of statistical methods for testing hypotheses. The final result of using this learning algorithm depends on the correctness or incorrectness of the answers of the learner in the course of his movement through the training graph. In this process, situations may arise where the learner may not reach the end of the training program. In the case of his successful passage through the nodes of the graph, which can only be with the correct answers to the questions asked, the student receives a positive evaluation for mastering the content of the material provided.

The implementation of this active training method is based on the following important points of work of the K-Na nephron pump of a human kidney. One of such important functions of the K-Na pump is the regulation of blood pressure by monitoring the juxtaglomerular apparatus of the salt composition of human blood. Without the functioning of such a pump, most nephron cells will be destroyed,

which is the cause of human diseases. Due to the increase in the Na content in the blood, the K-Na pump is automatically activated, which ensures removal of even more Na ions from the cell together with water.

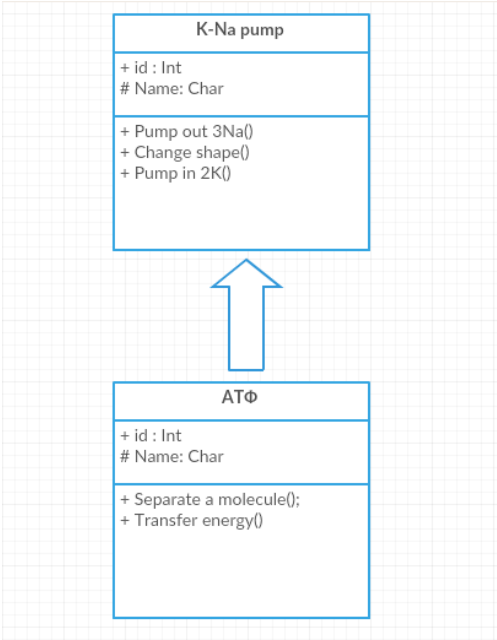

Figure 1. Operation mechanism of the K-Na pump

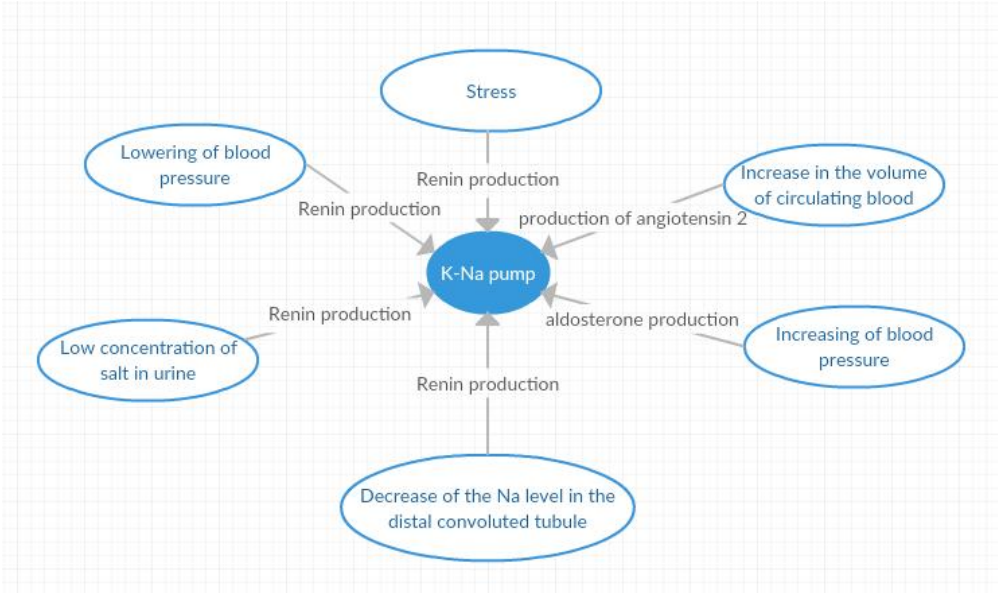

Figure 2. Influence of external factors on the operation of the K-Na pump

To study the reasons for the onset of the operation of the K-Na pump, it is necessary to consider the processes of action of the renin-angiotensin-aldosterone

system, which is triggered by the production of renin in juxtaglomerular kidney cells.

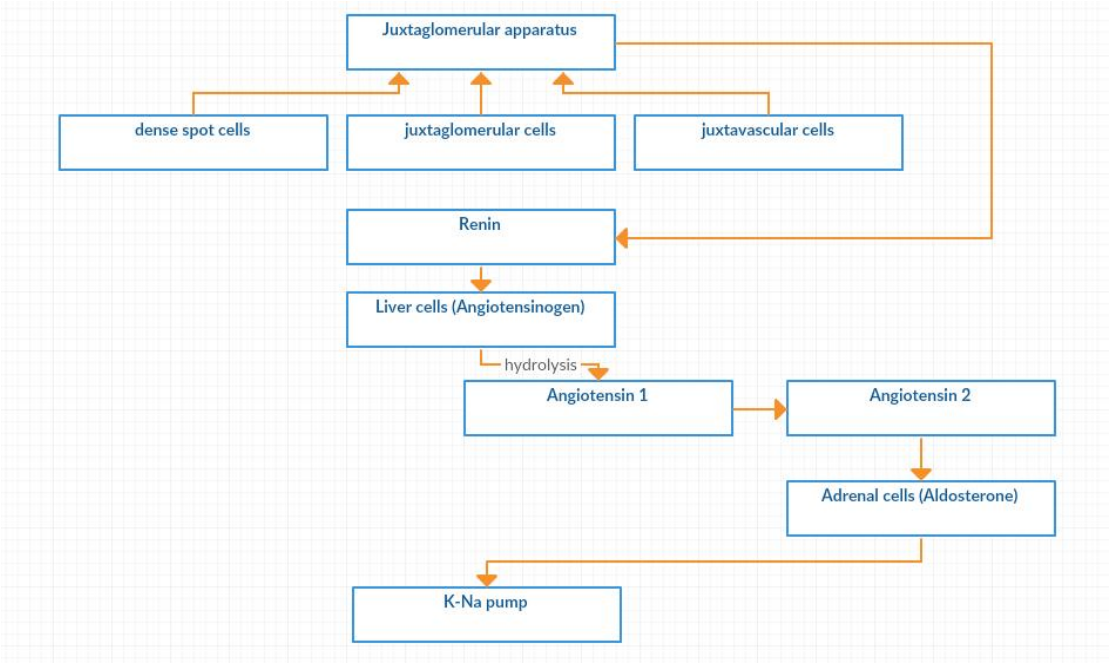

Figure 3. Renin-angiotensin-aldosterone system

Results. In the proposed report methods and technologies of active teaching of students to computer modeling of various processes are given on the example of functioning of K-Na nephron pump of human kidney. The results of research on the construction of the structural-logical scheme, the training graph, the evaluation system for the correctness or incorrectness of the student's answers, the algorithms for the transition from one node to another node of this graph are developed, statistical methods for estimating the probability of occurrence of cycles in this graph, the algorithm for cutting off branches of this graph, eliminating such a loop. In the presentation of material on the functioning of the K-Na pump, the own results of the study on computer modeling and statistical processing of the received data by the "big data" technologies are used.

This report contains the results of a study on computer modeling of the chemical-biological processes occurring in the nephron as a result of the operation of the K-Na pump.

Bibliography

[1] Bedelbayev A.A. Computer mathematical and biochemical modeling and simulation of the life processes in the human organs. International conference “Mathematical Modeling and High Performance Computing in Bioinformatics, Biomedicine and Biotechnology”. Abstracts, p. 17, 2014

[2] Bedelbayev A.A. High-performance intelligent analysis of biomechanical processes of control and management of blood pressure in human kidney. The 2nd International Conference “Mathematical Modelling and High-Performance Computing in Bioinformatics, Biomedicine and Biotechnology”, Abstracts, p. 22, 2016

[3] Bedelbayev A.A. The organization of high-performance computing processes monitoring and control of blood saline composition in the human kidney nephrons. The 2nd International Conference “Mathematical Modelling and High-Performance Computing in Bioinformatics, Biomedicine and Biotechnology”, Abstracts, p. 23, 2016

[4] Bedelbayev A. A. Development of a high-performance computational computer simulation of the Renin-Angiotensinogen-Aldosterone System for the regulation of human blood pressure. Научный семинар «Дифференциальные операторы и моделирование сложных систем» (DOMCS-2017), стр. 51, Алматы, 2017

[5] Активный транспорт, натриевый насос. Na/K-насос. [Электрон. ресурс]. URL: http://meduniver.com/Medical/Physiology/20.html